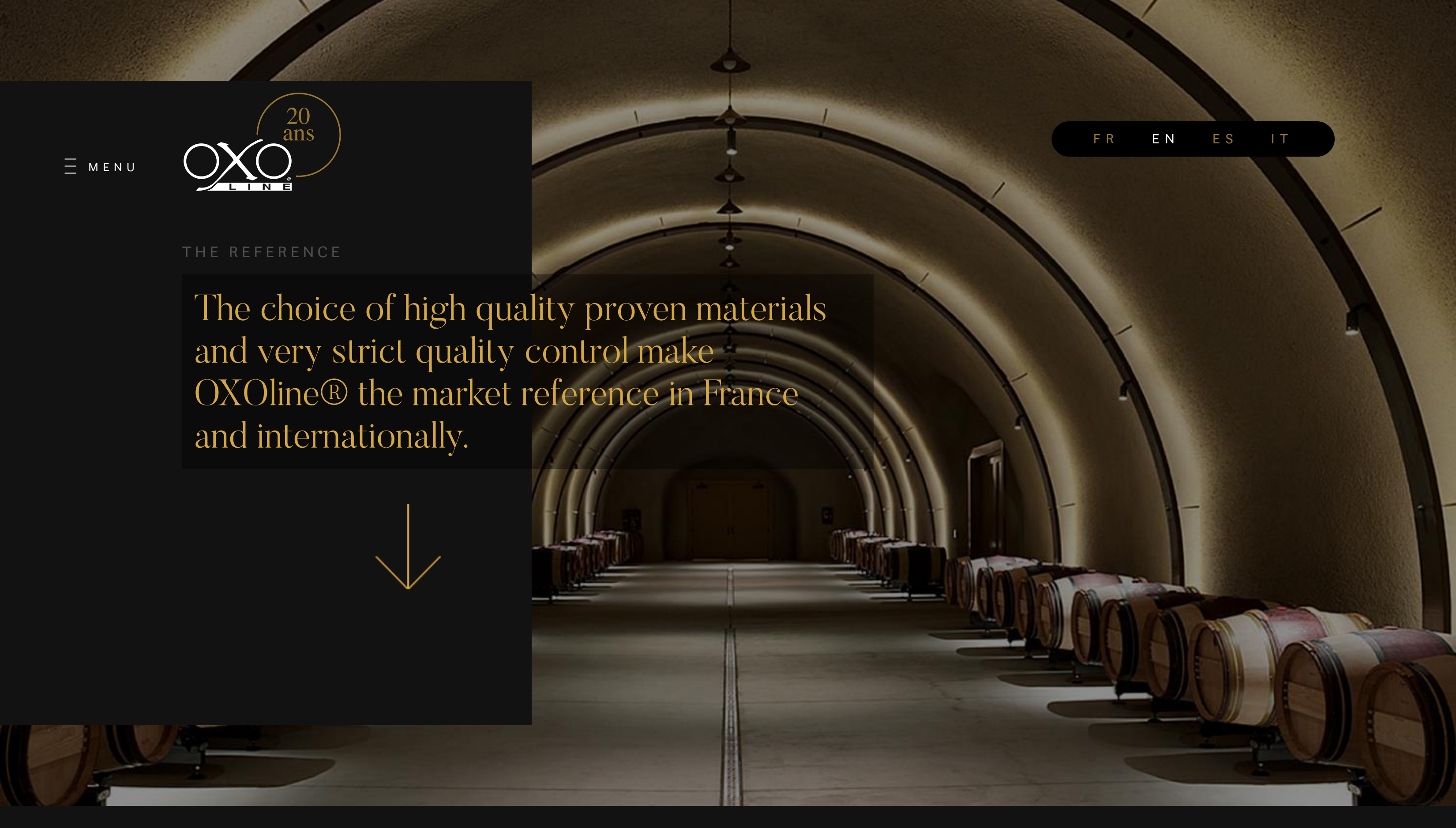

THE REFERENCE

The choice of high quality proven materials and very strict quality control make OXOline® the market reference in France and internationally.

OXOline1 compact version (no wheels)

More

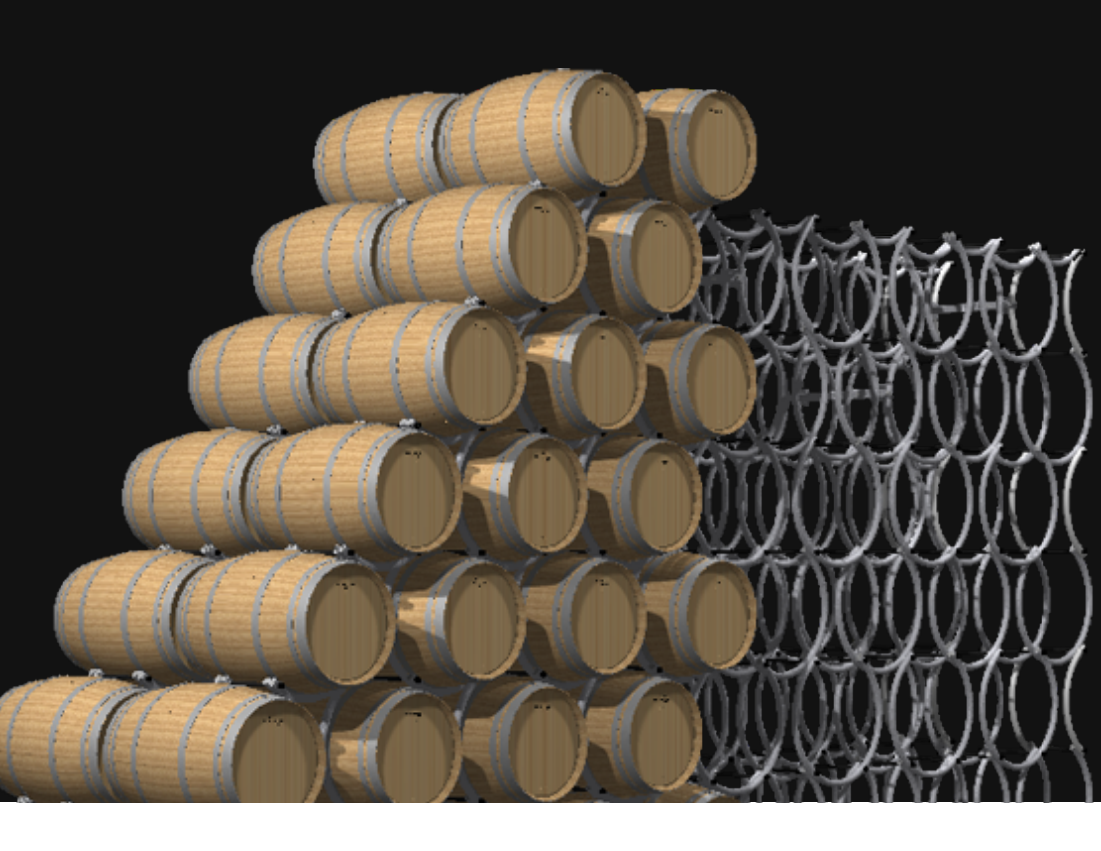

OXOline1 standard version (with wheels)

More

OXOline2 compact version (no wheels)

More

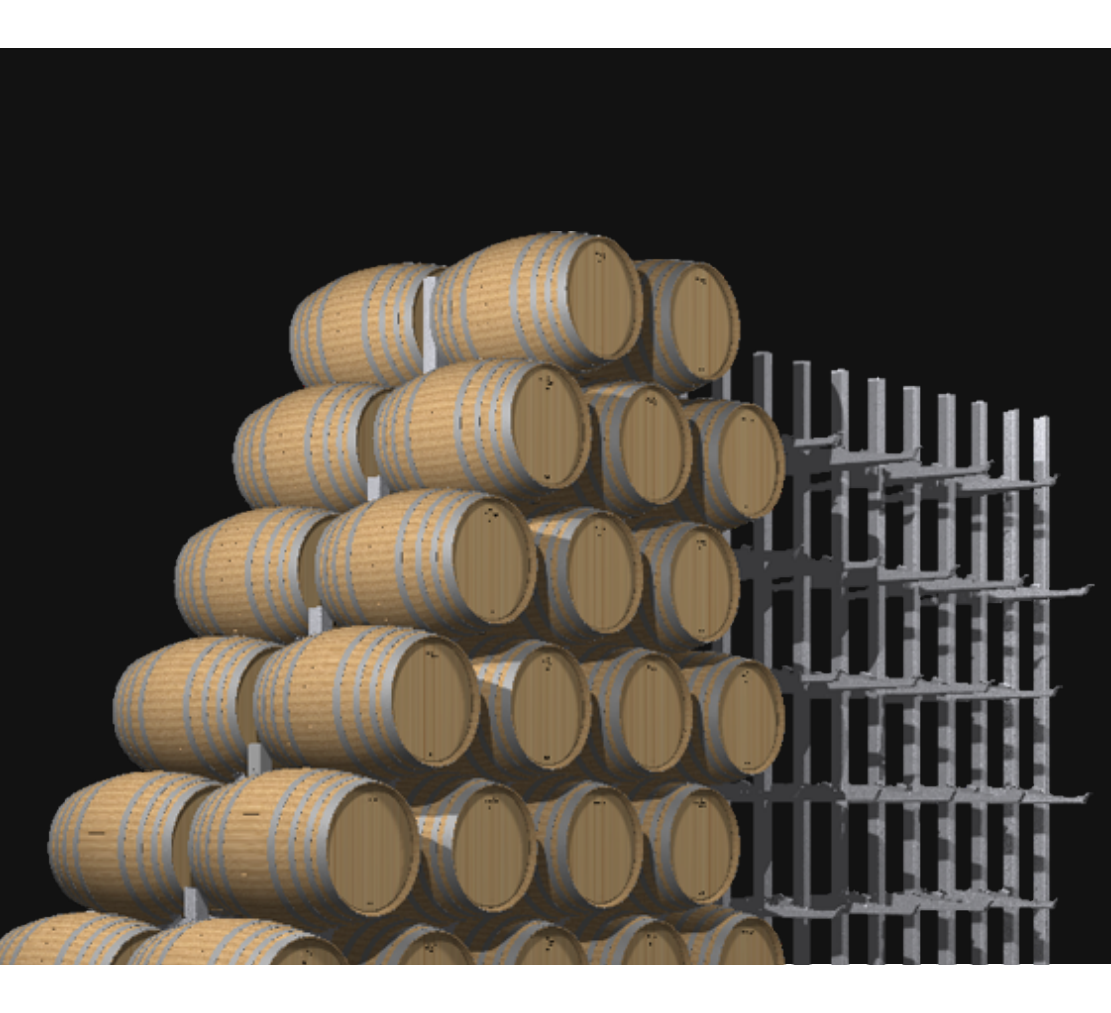

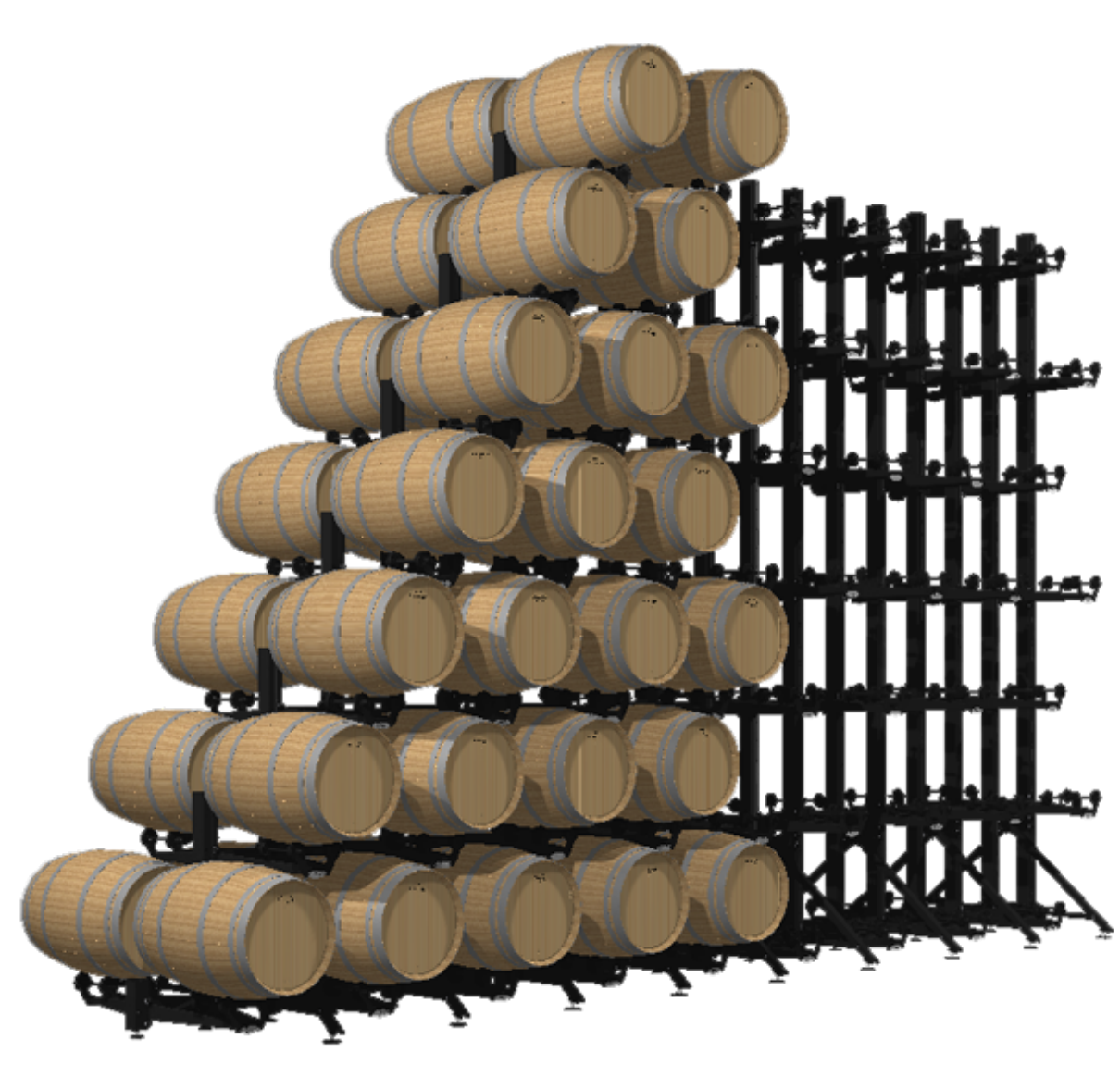

OXOline2 standard version (with wheels)

X Close

In addition to the functionalities of OXOline1, OXOline2 Standard allows all that is possible to imagine. Individual handling of full or empty barrels regardless of location in the stack, manual or electric barrel rotation for batonnage or Vinification Integrale barrel fermentations; mechanized racking via esquive, storing barrels in curved rows...

OXOline2 is the result of 15 years of research and is unequaled, both for its quality of manufacturing as well as the functionality it offers.

Barrel type

200 L, 225 L, 228 L, 300 L, 350 L, 400 L, 500 L, 600 L

Functionalities

- ✓ FILLING IN PLACE
- ✓ BATONNAGE, LEES STIRRING BY ROTATION
- ✓ TRADITIONAL BATONNAGE/LEES STIRRING
- ✓ RINSING IN PLACE
- ✓ EMPTYING
- ✓ REMOVAL WITHOUT UNSTACKING
- ✓ RACKING VIA ESQUIVE
- ✓ AGING WITH "BUNG ON THE SIDE"
- ✓ NO WEIGHT LOAD ON BARRELS
- ✓ EASY CLEANING UNDER THE STRUCTURE

Options

- ✓ STRAIGHT STACKING
- ✓ PYRAMID STACKING
- ✓ ADJUSTABLE FEET
- ✓ GALVANIZED FINISH
- ✓ ANTI-CORROSIVE FINISH - HIGHLY RESISTANT EPOXY PAINT
- ✓ STAINLESS STEEL
- ✓ MOTORIZED ROTATION
- ✓ 8 ROLLERS FOR ROTATING 500L PUNCHEONS

Accessories

- ✓ MINILIFT (MOVE EMPTY BARRELS)
- ✓ SUPERLIFT (MOVE EMPTY BARRELS)
- ✓ OXOLIFT (MOVE EMPTY AND FULL BARRELS)
- ✓ EMPTYING PAN
- ✓ EXPANDING BUNG
- ✓ CLEANING WAND
- ✓ RACKING WAND

Contact us for more information

Monobloc - Barriques

X Close

This stainless steel non-stackable individual support is ideal for storing barrels of 225 L to 300 L on one level. The integrated rollers allow easy rotation of the barrel for lees stirring, and also for utilization of Vinification Integrale®. Full barrels can be easily moved on the rack with a pallet jack.

Contact us for more information

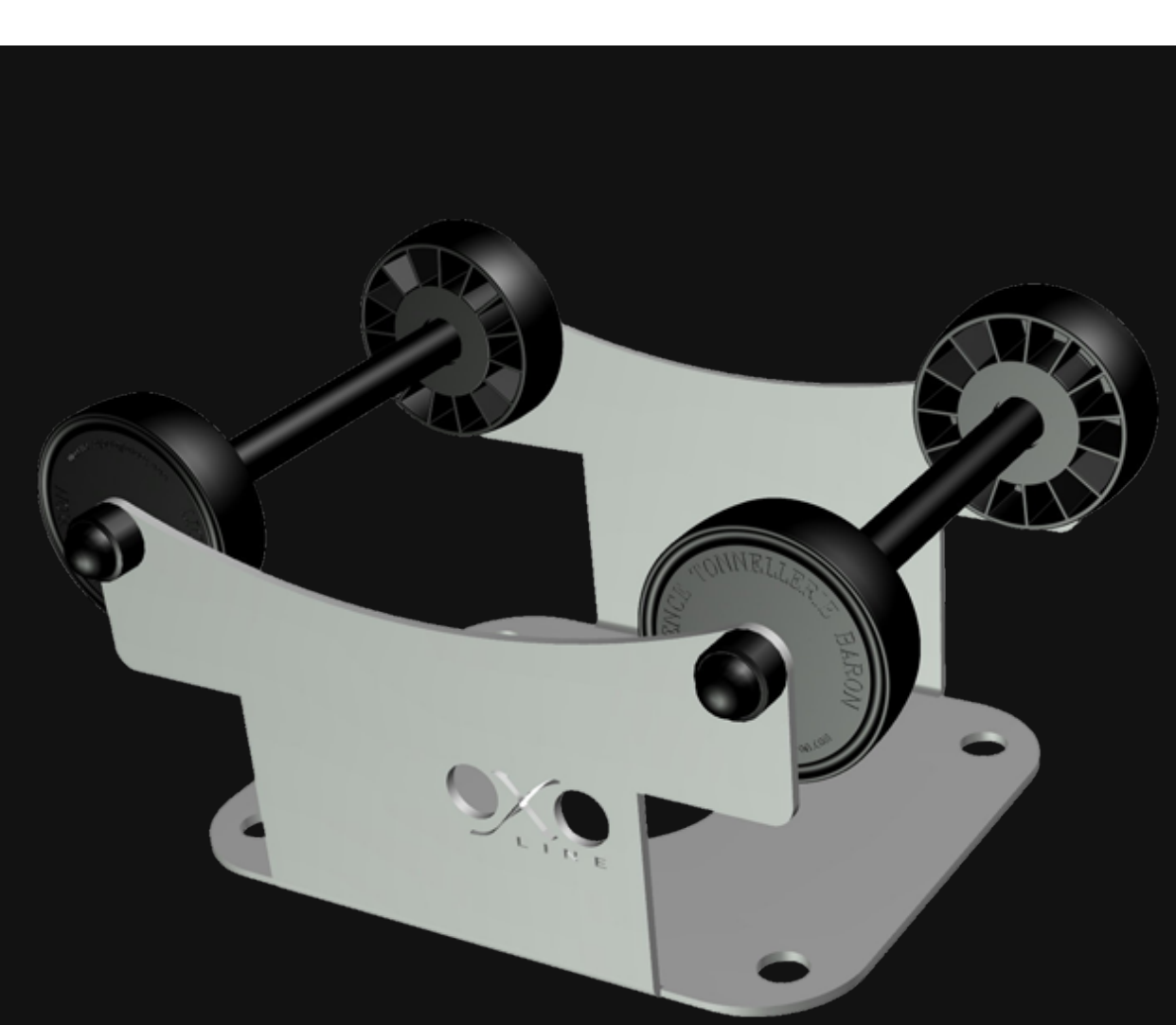

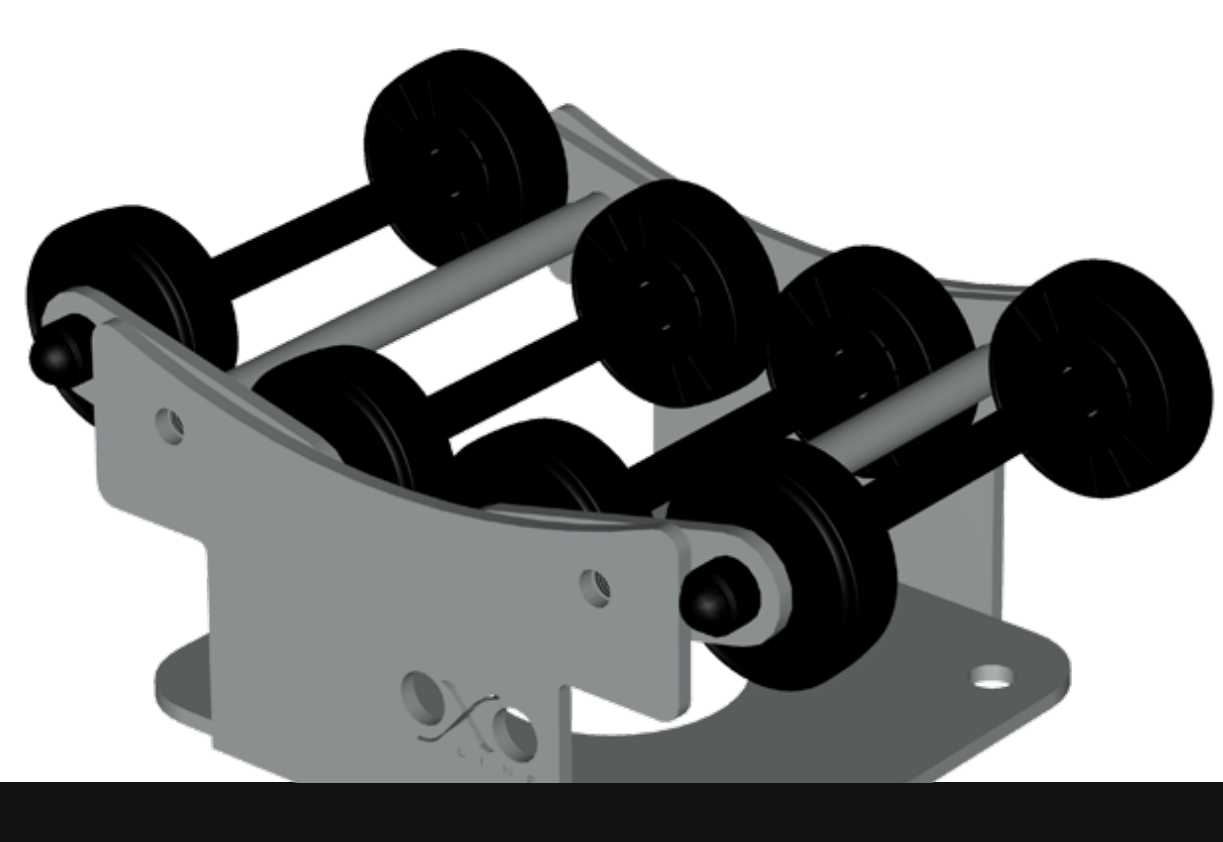

Monobloc Large Format

More

OXOline Monobloc M600

More

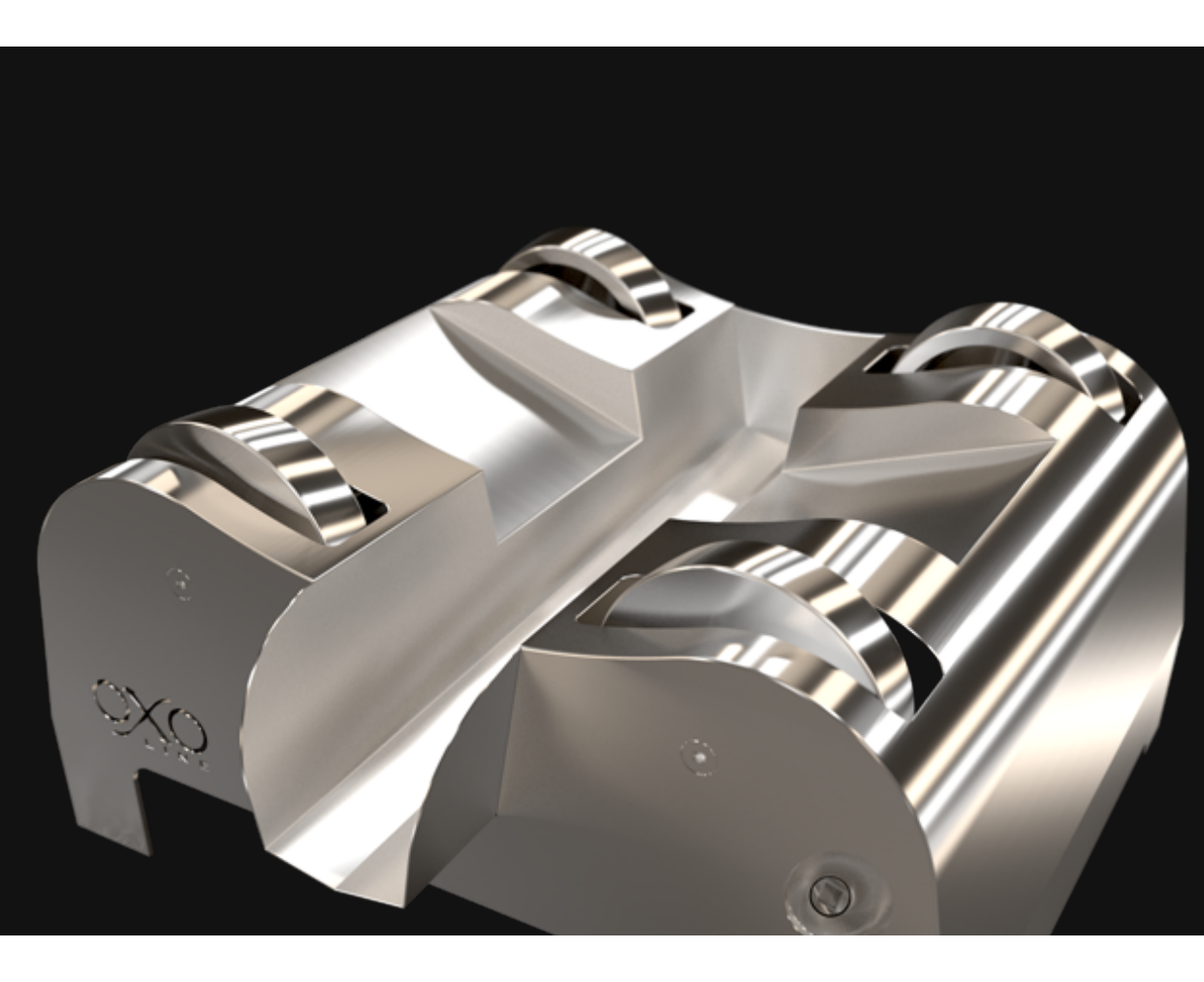

Expanding Bung

More

Moog Washing Wand

More

OXOline1 V Pan

More

OXOline1 Floor Pan

More

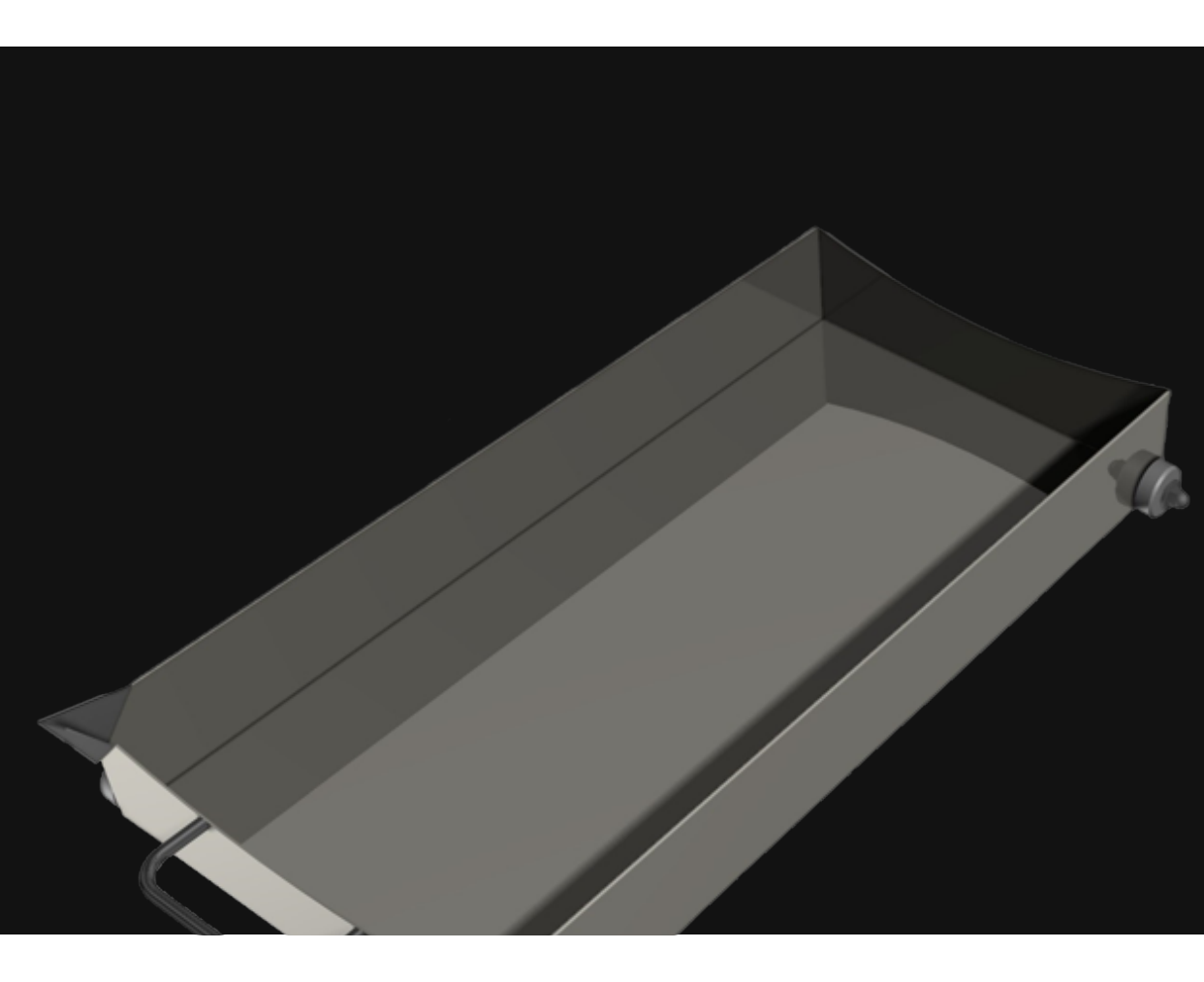

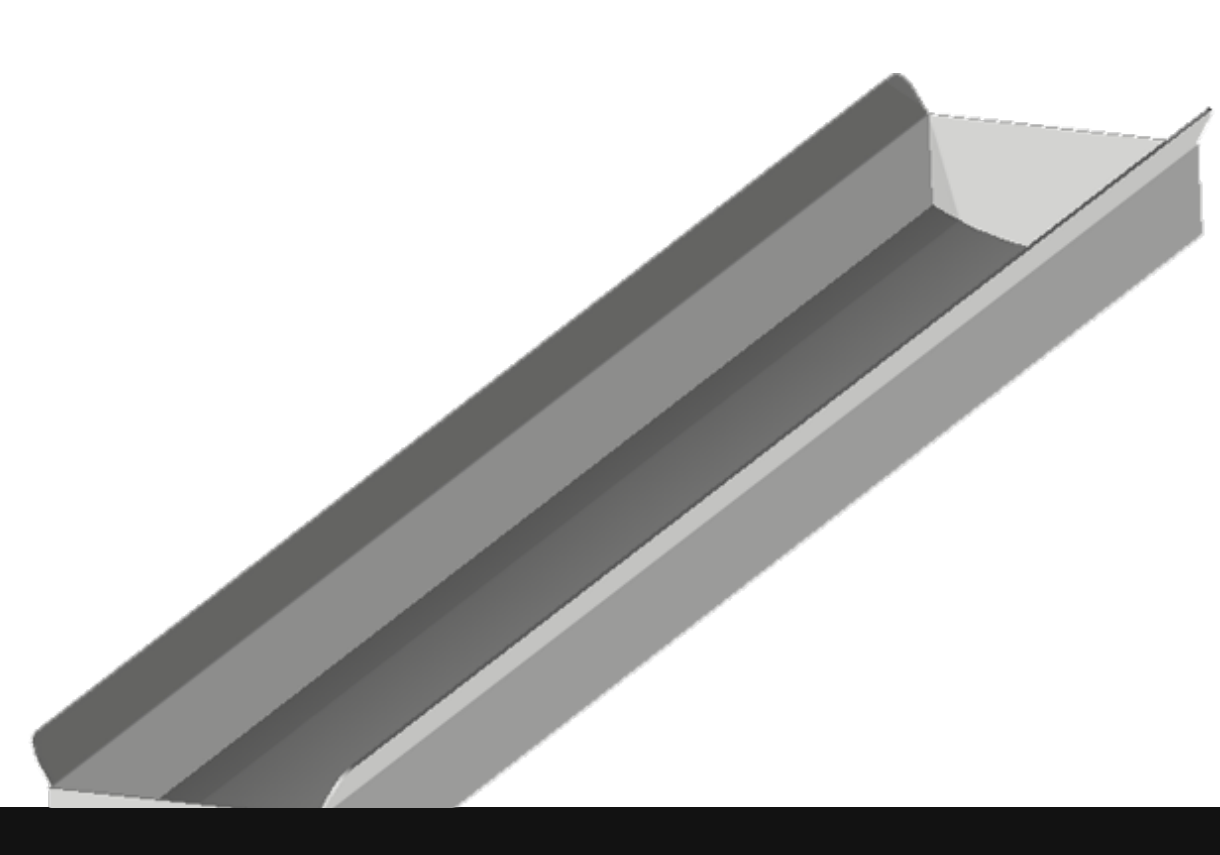

OXOline2 Pan

More

Minilift

More

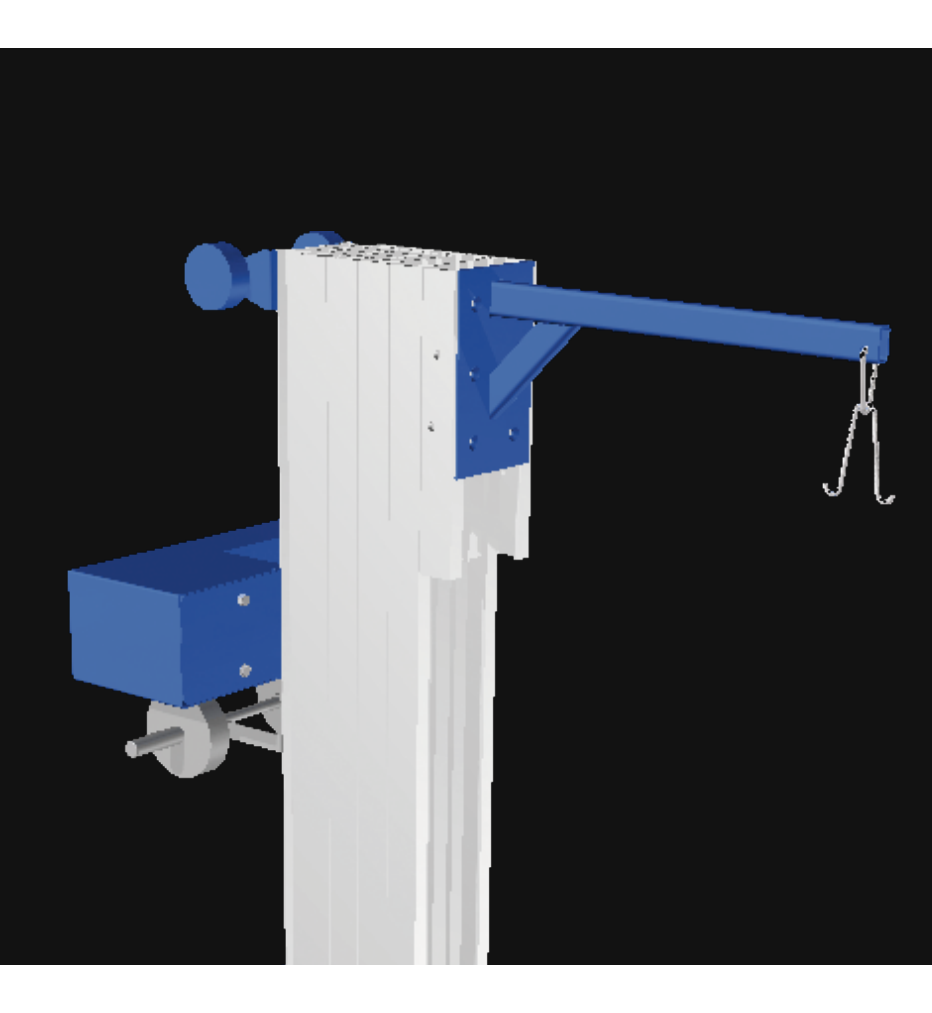

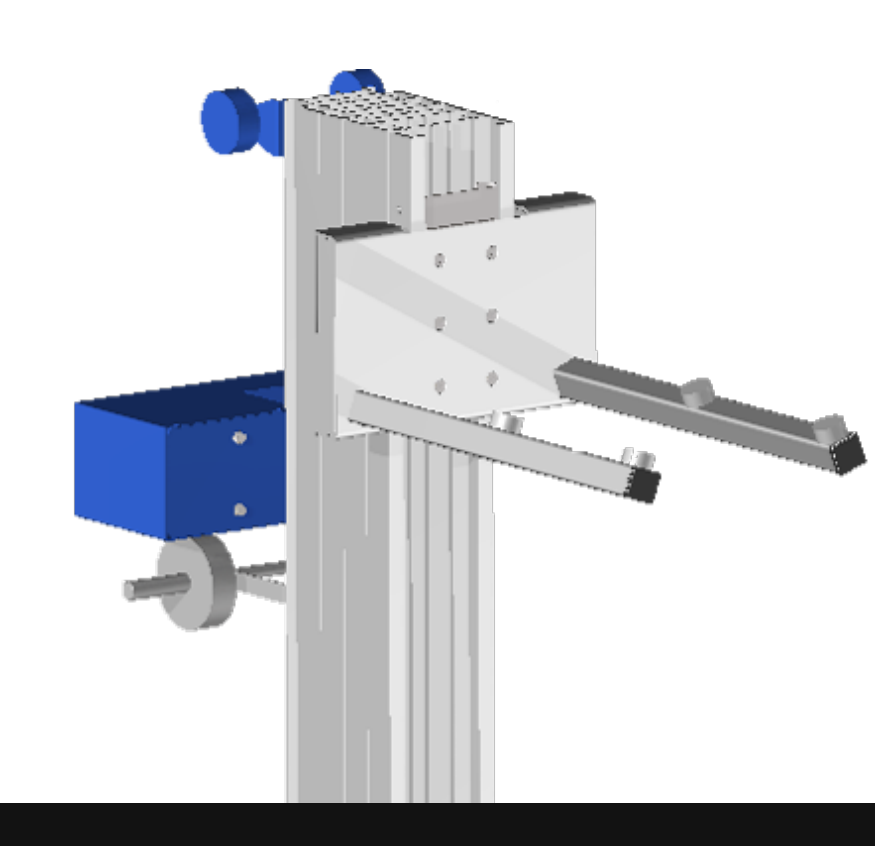

Superlift

More

OXOlift

More

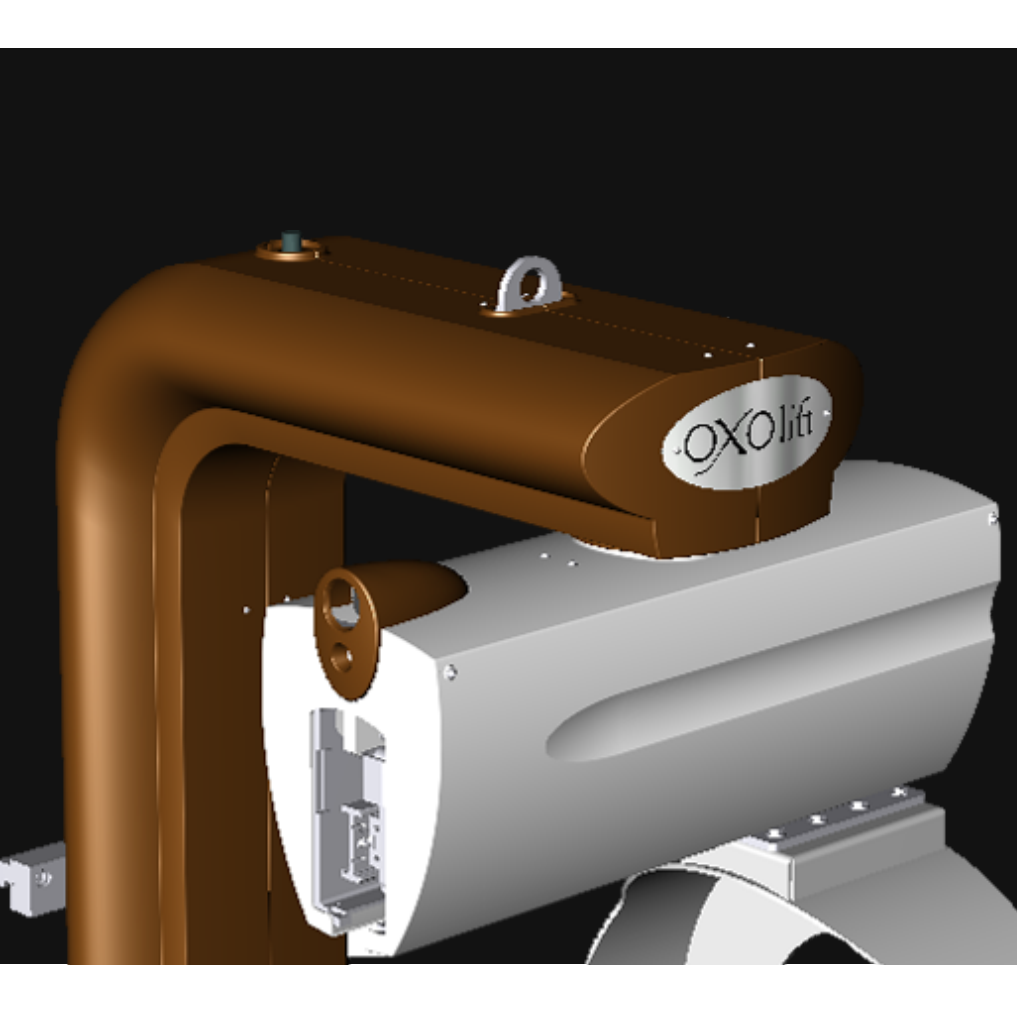

Autolift

More

20 ans

Achieving greatness

Oxoline
20, RUE DES GILLARDEAUX
17100 LES GONDS
FRANCE

T : +33 (0)5 46 93 18 02
F : +33 (0)5 46 93 00 87

info@oxoline.com